COMMERCIAL DAVE .com 919-697-7475

DEJANA® Truck and Utility Equipment

Katerack®

Side Katerack Installation Instructions

Ram ProMaster City 2015+

Frame Kit Part #: CRC 28-1000-001

V1.0.12.06.18

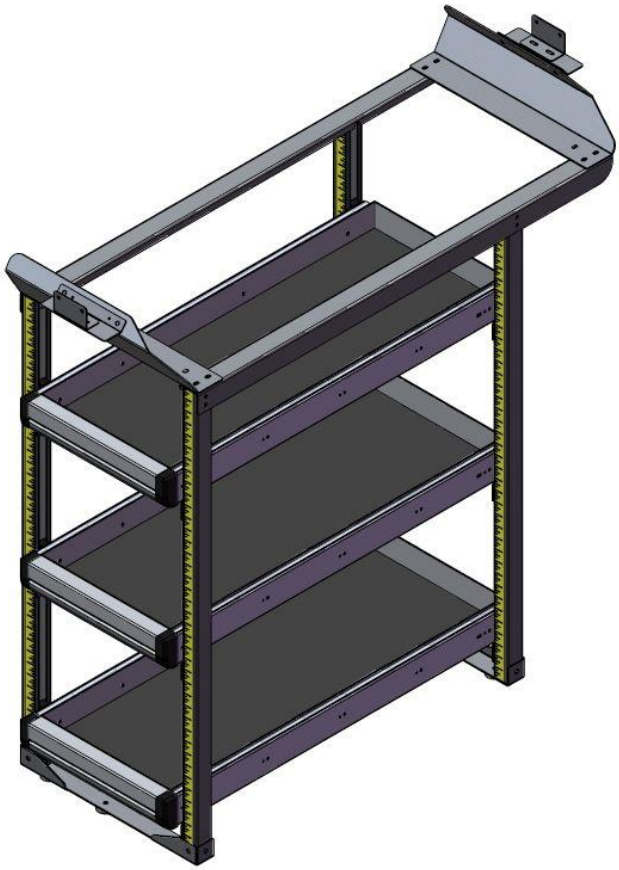

www.dejana.com

IMPORTANT INSTALLATION STEPS ARE DENOTED USING A STOP SIGN. THESE STEPS MUST BE PERFORMED IN THE SPECIFIED ORDER TO ENSURE PROPER INSTALLATION AND MUST BE FOLLOWED IN ORDER TO MAINTAIN YOUR PRODUCT WARRANTY!

CRITICAL INFORMATION PERTAINING TO USER AND/OR VEHICLE SAFETY IS DENOTED USING A CAUTION SIGN. SAFETY ITEMS MUST BE STRICTLY ADHERED TO IN ORDER TO ENSURE A SAFE WORKING ENVIRONMENT!

WARNING

THE USE OF DRILLS WITH INTEGRAL DRILL STOPS ALONG WITH PROPER INSPECTION FOR GAS TANK, GAS LINES, BRAKE LINES AND ELECTRICAL LINES PRIOR TO DRILLING ANY MOUNTING HOLES IS STRONGLY RECOMMENDED TO ENSURE THAT VEHICLE DAMAGE IS AVOIDED!

THE USE OF AIR OR ELECTRIC IMPACT TOOLS FOR THE ASSEMBLY OF FASTENERS COULD CAUSE FASTENER FAILURE!

THE USE OF NON-STANDARD FASTENERS AND/OR DEVIATING FROM THE FASTENERS SPECIFIED IN THESE INSTRUCTIONS MAY VOID YOUR PRODUCT WARRANTY!

ALL DRILLED HOLES IN THE VEHICLES SHOULD HAVE THE RAW METAL EDGES SEALED WITH A SELF-ETCHING PRIMER TO RESIST CORROSION AND POTENTIAL FASTENER POINT FAILURE!

Katerack Installation Instructions – TOOL LIST

Safety glasses **MUST** be worn at all times!

TOOLS		
Drill 	**Drill Bits** 3/8” & 1/2”	**Drill Stop** 1/2”
Drill 7/16” & 1/2” Hex Sockets, T45 TORX Bit with Misc. Extensions	**Box End Wrench** 7/16” & 9/16”	**Ratchet Wrench**

RECOMMENDED TOOLS:

- Inch-pound Torque Wrench
- Pneumatic Plus Nut Gun
- Impact Gun
- Leveling Gauge
- 1” Hole Saw

Katerack Installation Instructions

Hardware:

FAS 37341 SERRATED FLANGE NUT, 3/8" (QTY: 8)	FAS 10140022 TRUSS HEAD SCREW 3/8"-16 X 0.75"L (QTY: 8)

COMMERCIAL DAVE .com 919-697-7475

Step 1: Assemble Baseplates with Vertical Struts		**Notes:**
If pre-assembled from manufacturer proceed to Step 2.		
A.	Assemble the vertical struts with the baseplates using 3/8" hardware. 	Continually check that the frame is square during assembly. Baseplates are the same part.

Katerack Installation Instructions

Hardware:

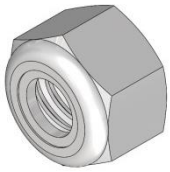 FAS 37018 NYLOCK NUT, 1/4”-20 (QTY: 8)	 FAS 19903 SERRATED FLANGE BOLT, 1/4”-20 X 3/4” (QTY: 8)	 FAS 33078 FLAT WASHER, 1/4” X 5/8” O.D. (QTY: 8)

Step 2: Assemble Side Frame Kit		**Notes:**
A.	Assemble strut channels and baseplate subassemblies with transverse mounting angles using 1/4”-20 hardware. 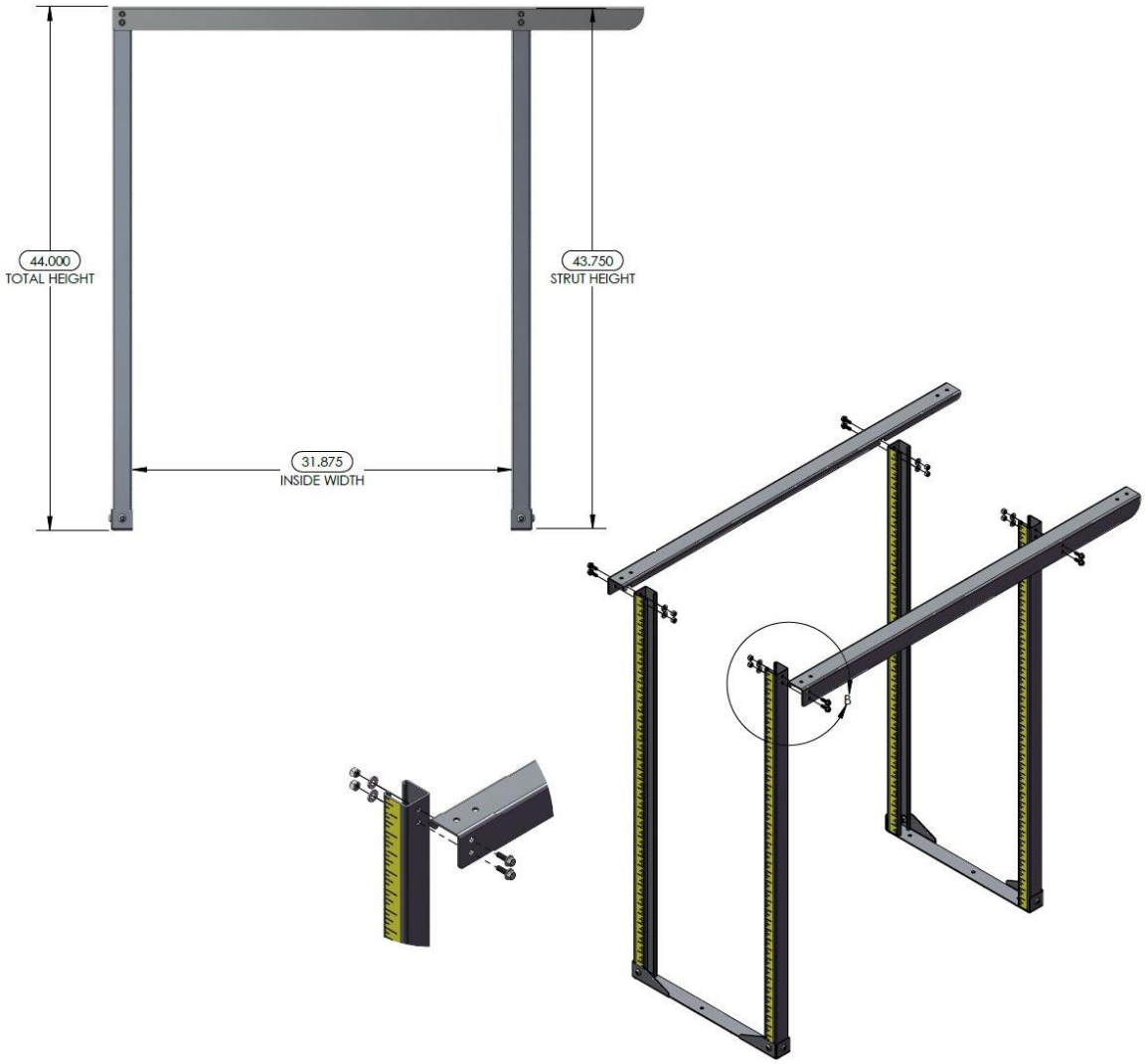 	Continually check that the frame is square during assembly.

Katerack Installation Instructions

Hardware:

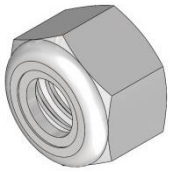 FAS 37018 NYLOCK NUT, 1/4”-20 (QTY: 16)	FAS 19903 SERRATED FLANGE BOLT, 1/4”-20 X 3/4” (QTY: 16)	FAS 33078 FLAT WASHER, 1/4” X 5/8” O.D. (QTY: 16)

Step 3: Assemble Upper Mounting Brackets and Backing Plates to Frame Kit		**Notes:**
A.	Assemble upper mounting brackets to the frame kit using 1/4”-20 hardware. 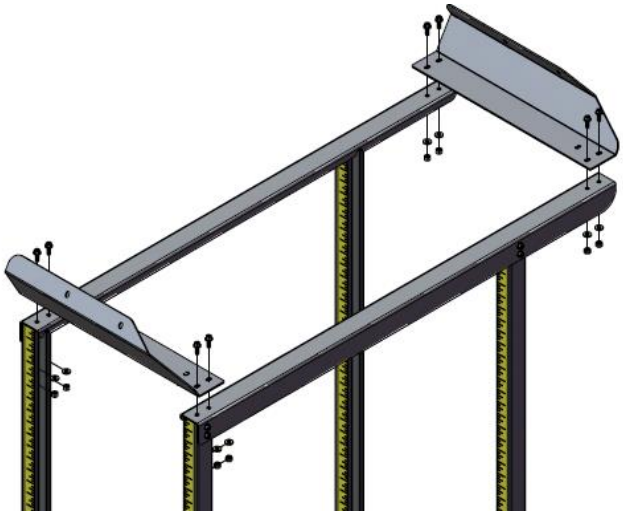	Upper mounting brackets have Curbside and Streetside callouts.
B.	Assemble first set of backing plates to the upper mounting brackets using 1/4”-20 hardware. 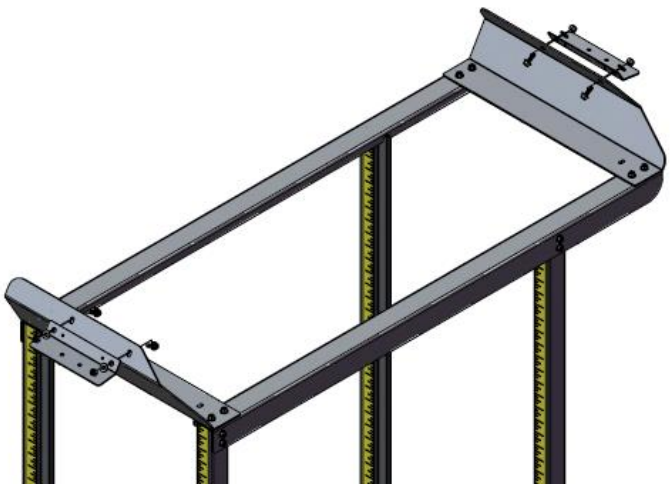	

Step 3: Assemble Upper Mounting Brackets and Backing Plates to Frame Kit, *CONT'd*		**Notes:**
C.	Assemble second set of backing plates to the upper mounting brackets using 1/4"-20 hardware. 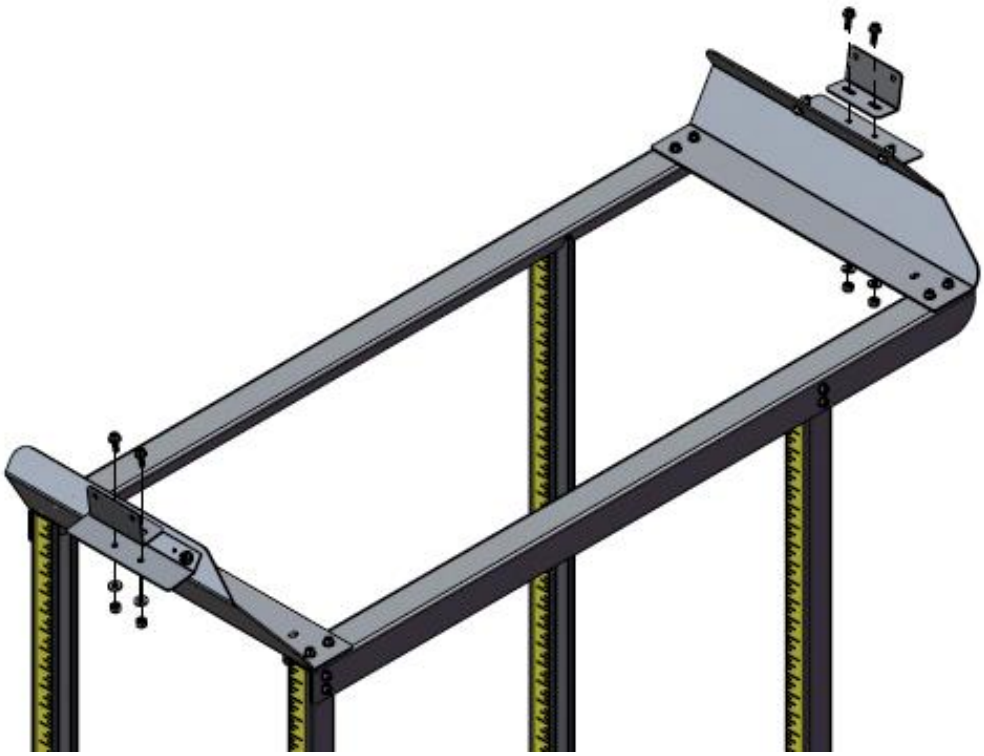	
D.	Assembled frame kit should look as shown. 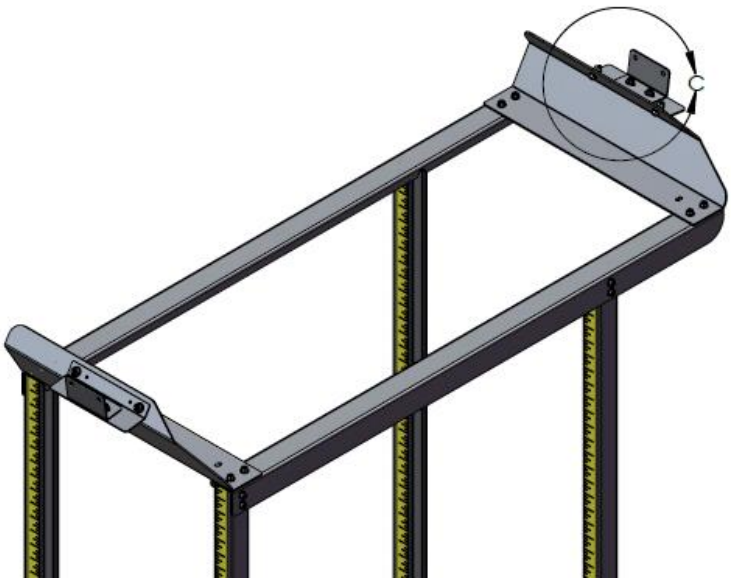 	

Katerack Installation Instructions

Hardware:

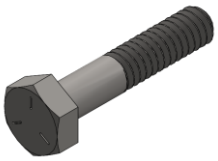 FAS 13007 1/4”-20 HEX BOLT, 1.25”L (QTY: 4)	FAS 33618 WASHER LOCK, 1/4” (QTY: 4)	FAS 33078 FLAT WASHER, 1/4” X 5/8” O.D. (QTY: 4)	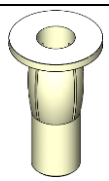 FAS 12319-00491 1/4”-20 PLUS NUT (QTY: 4)

Step 4: Install Upper Mounting Brackets to Vehicle		**Notes:**
A.	Remove the head liner from the Curbside and Roadside of the vehicle by removing (3) phillips head screws from each side.	
B.	Taking off the headliner will reveal the below OEM brackets. Place the frame kit in the vehicle and align it such that the backing plates (CRF 28-1100-006) are centered between the two OEM brackets. Then adjust the frame kit so that it sits evenly between the Curbside and Roadside. Mark (2) hole locations on each side, using the backing plate pre-drilled holes as a template. 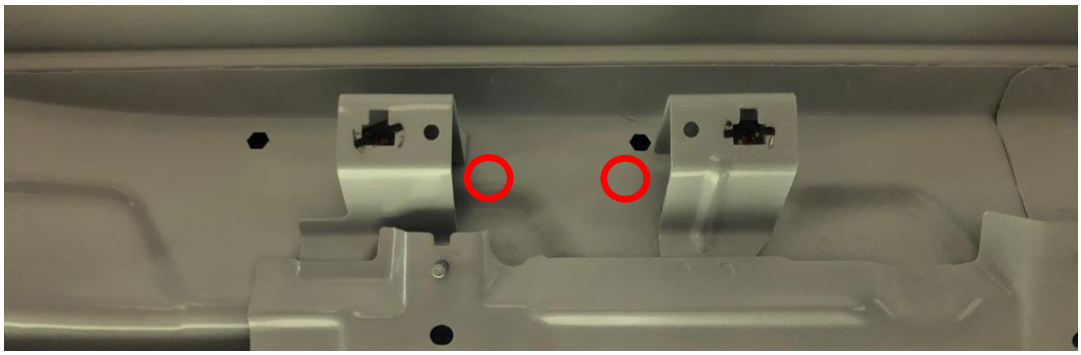	Bolts may need to be loosened in order to achieve this step.

COMMERCIAL DAVE .com 919-697-7475

Step 4: Install Upper Mounting Brackets to Vehicle, *CONT'd*		**Notes:**
C.	Remove the frame kit from the vehicle and drill through those (4) marked holes using a 3/8" drill bit. Insert (4) 1/4"-20 plus nuts into drilled out holes.	Refer to the next page on how to install plus nuts.
D.	Reinsert frame kit into vehicle and loosely fasten the upper mounting brackets into the plus nuts using 1/4"-20 hex head bolts. 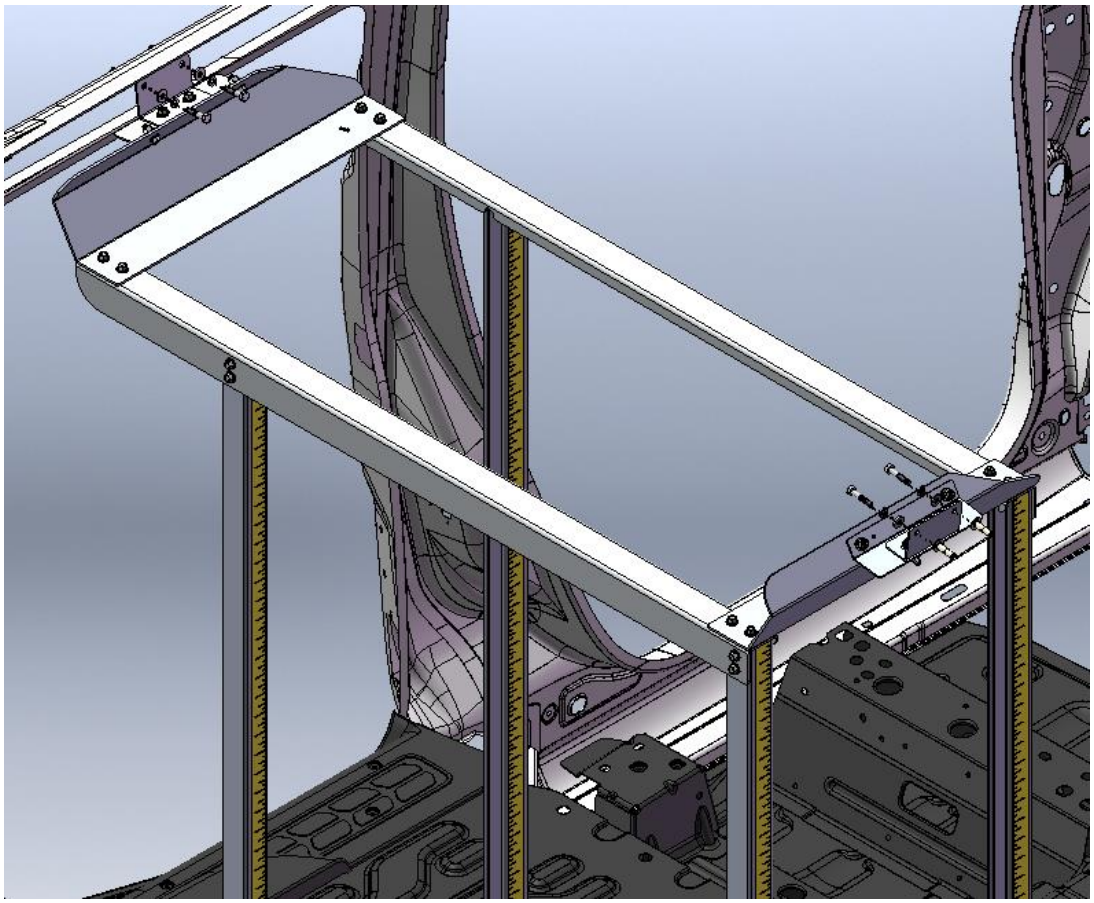	Include flat and lock washers when fastening FAS 13007.

COMMERCIAL DAVE .com 919-697-7475

Step 4: Install Upper Mounting Brackets to Vehicle, *CONT'd*	**Notes:**

Before drilling check all mounting locations to prevent penetration of:
Gas Lines, Gas Tanks, Break Lines, Wiring or any other vehicle structure.

There are 2 methods for installing the Plus Nuts: Manual & Automatic (They are both listed below)

F.

First Method: *Manual*

1.
2.
3. 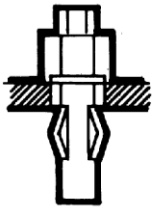
4.

1. The Plus Nut is Pre-bulbed for easy installation.
2. The Plus Nut is pre-assembled with hex cap and hex bolt, then inserted into pre-drilled hole.
3. As the bolt is tightened the Plus Nut expands holding in place.
4. Full tightened Plus Nut provides reliable nut plate for fastening.

Second Method: Automatic *(Requires Pneumatic Plus Nut Gun)*

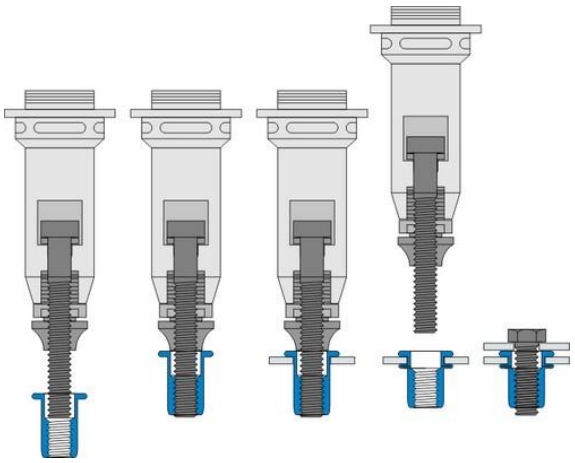

1. Thread Plus Nut onto Plus Nut Gun.
2. Screw Plus Nut into Hole.
3. When Plus Nut is fully tightened remove Plus Nut Gun.

Katerack Installation Instructions

Hardware:

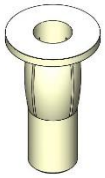 FAS 12319-00492 5-16”-18 PLUS NUT (QTY: 6)	AUST EQFLATWASHER164 SPACER, 3/8” THICK, 1”O.D. X .4375” I.D. (QTY: 4)	FAS 0144550 5/16”18 HEX BOLT, 2”L (QTY: 6)	FAS 33620 5/16” LOCK WASHER (QTY: 6)	FAS 33006 5/16” FLAT WASHER (QTY: 6)

Step 5: Mount Frame Kit to the Floor	**Notes:**

IMPORTANT!

BEFORE MARKING FLOOR MOUNTING HOLE LOCATIONS, SQUARE UP THE FRAME KIT AND MAINTAIN THE BELOW DIMENSIONS IN BETWEEN THE STRUTS IN BOTH THE CURBSIDE AND ROADSIDE, AS WELL AS AT THE TOP AND BOTTOM OF THE STRUTS

B. Hold the placement on the Curbside baseplate and adjust the baseplate and struts on the Roadside to the dimensions below.

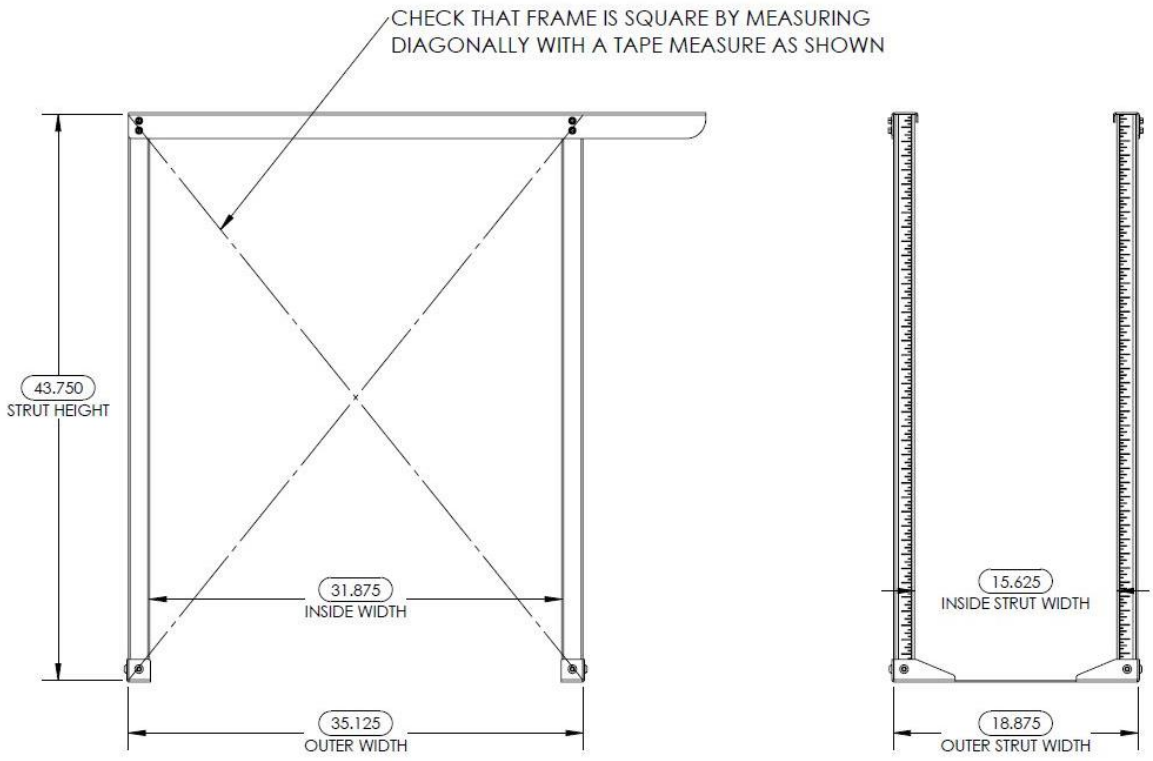

Step 5: Mount Frame Kit to the Floor, *CONT'd*		**Notes:**
B.	Once dimensions are confirmed, tighten the bolts on the upper mounting brackets.	
C.	Mark the (6) hole locations in the Curbside and Streetside baseplates. Once marked move the frame kit off of the marked spots. 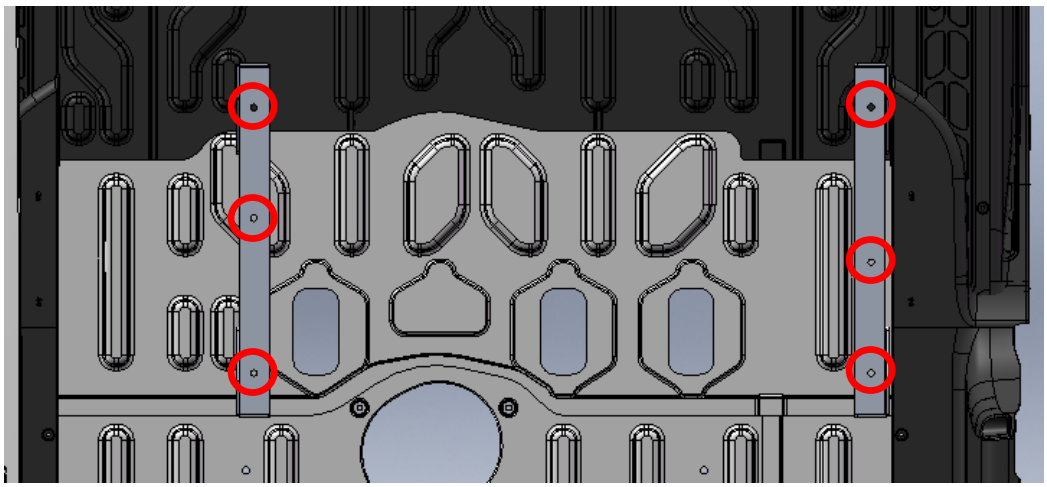	Bolts may need to be loosened or removed to give access to the marked holes.
D.	Drill through the (6) marked holes with a 1" hole saw if there's a floor mat in the vehicle. Then using a 1/2" drill bit, drill through those (6) holes through the vehicles floor.	Use drill stop when drilling into vehicle.
E.	Insert a 5/16" plus nut into the (6) locations you just drilled through. Then on top of those plus nuts, insert (1) spacer onto each specified hole location. This makes for (4) total spacers. Place the frame kit back inside the vehicle and fasten it down using (6) FAS 0144550. 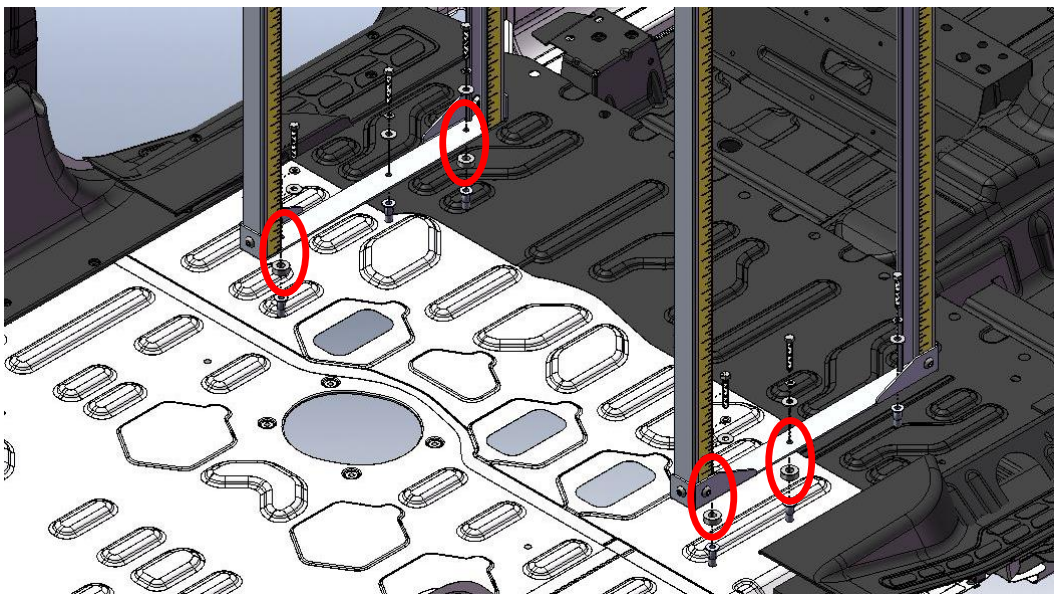	Refer to page 10 on how to install plus nuts. Use rust blocker or any other form of rust protection spray on drilled out holes. Include flat and lock washers when fastening FAS 0144550.

Katerack Installation Instructions

Hardware:

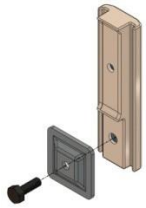

AUST MBH-1179-A01
STRUT NUT INSERT
(QTY 4, per drawer)

Step 6: Drawer Installation		**Notes:**
A.	Insert the Strut Nut assemblies into the strut channel at the exact same height and snug down ¼”-20 hex bolts with wrench.	Align all 4 Strut Nut inserts vertically.
B.	Extend drawer fully to the locked out position. Using the (4) #10-32 Pan Head Screws supplied with strut nut, securely attach slide to inserts. 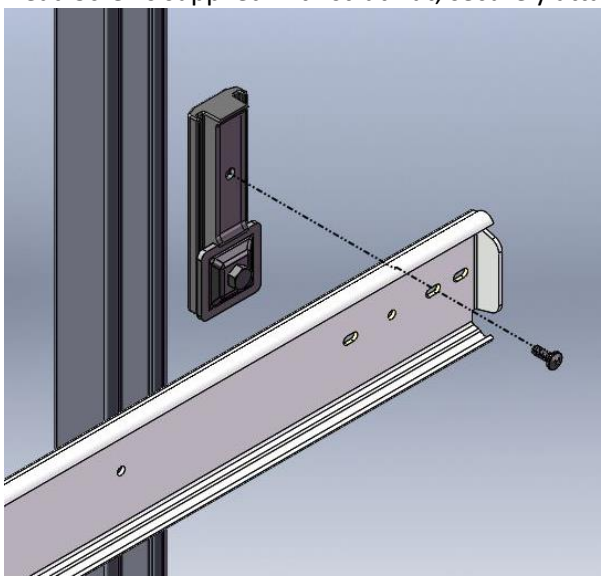	One bolt at each strut nut kit at each vertical strut
C.	Place Drawer back to the closed position (at your desired shelf height) and tighten the ¼”-20 hex bolts to 100 in-lbs.	To adjust the shelving height, loosen ¼”-20 hex bolts. Moving drawer parallel to floor with a second person to keep level.
D.	Repeat steps A, B, and C for each additional drawer you wish to add.	

Katerack Installation Instructions – Bill of Materials

ITEM NO.	PART NUMBER	DESCRIPTION	QTY.
1	AUS TB9002-43.75	STRUT CHANNEL, 43.75”L	4
2	CRF 28-1100-001	BASEPLATE	2
3	CRF 28-1100-002	TRANSVERSE MOUNTING ANGLE, LH	1
4	CRF 28-1100-003	TRANSVERSE MOUNTING ANGLE,RH	1
5	CRF 28-1100-004	TOP ATTACHMENT BRACKET, CS	1
6	CRF 28-1100-005	TOP ATTACHMENT BRACKET, RS	1
7	CRF 28-1100-006	BACKING PLATE, TOP BRACKET	2
8	CRF 28-1100-007	MOUNT ANGLE, TOP BRACKET	2
9	CRC 28-2100-001	14”W SIDE KATERACK DRAWER	TBD
10	FAS 19903	SERRATED FLANGE BOLT, 1/4”-20 X 3/4”	24
11	FAS 33078	FLAT WASHER, 1/4” X 5/8” O.D.	28
12	FAS 37018	NYLOCK NUT, 1/4”-20	24
13	FAS 10140022	BOLT, TORX, 3/8"-16 X 3/4"	8
14	FAS 37341	SERRATED FLANGE NUT 3/8"-16	8
15	FAS 33618	WASHER, LOCK, 1/4"	4
16	FAS 13007	HEX BOLT, 1/4"-20 X 1-1/4"	4
17	FAS 12319-00491	1/4”-20 PLUS NUT	4
18	FAS 33006	WASHER, FLAT, 5/16"	6
19	FAS 33620	WASHER, LOCK, 5/16"	6
20	FAS 0144550	5/16”-18 HEX BOLT, 2”L	6
21	FAS 12319-00492	5/16”-20 PLUS NUT	6
22	AUST EQFLATWASHER164	SPACER, 3/8" THICK, 1" OD, 7/16" ID	4
23	AUST MBH-1179-A01	STRUT NUT INSERT (4 PER DRAWER)	TBD

COMMERCIAL DAVE .com 919-697-7475

Katerack Installation Instructions – Technical Drawing

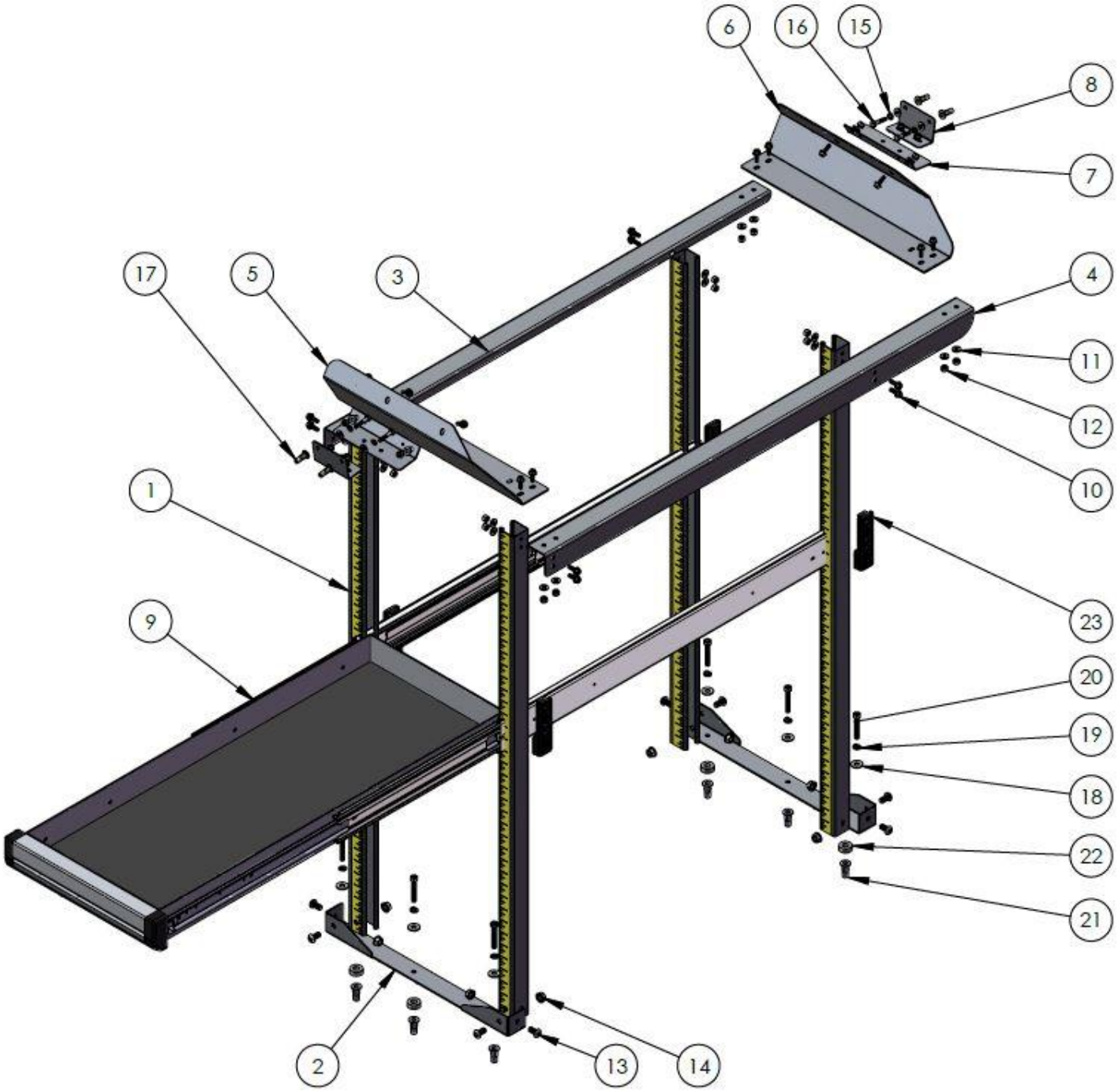

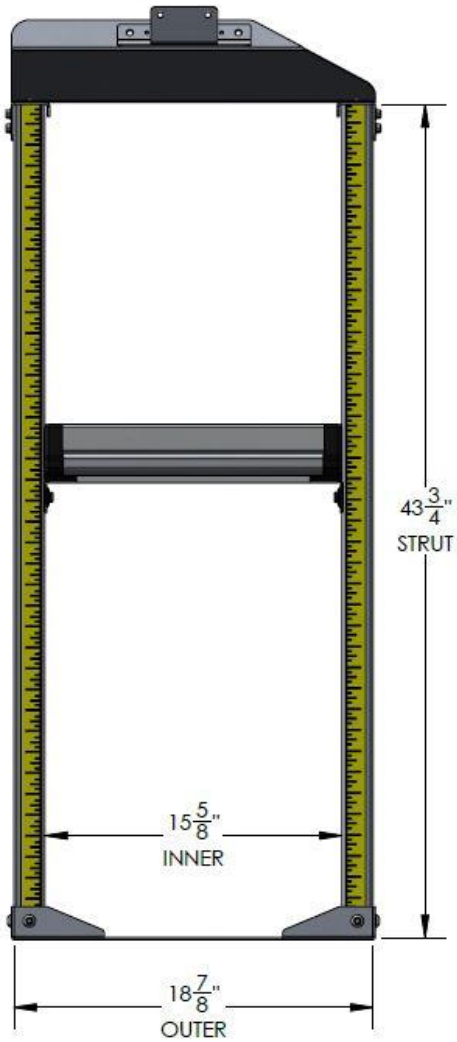
43 3/4"
STRUT
15 5/8"
INNER
18 7/8"
OUTER

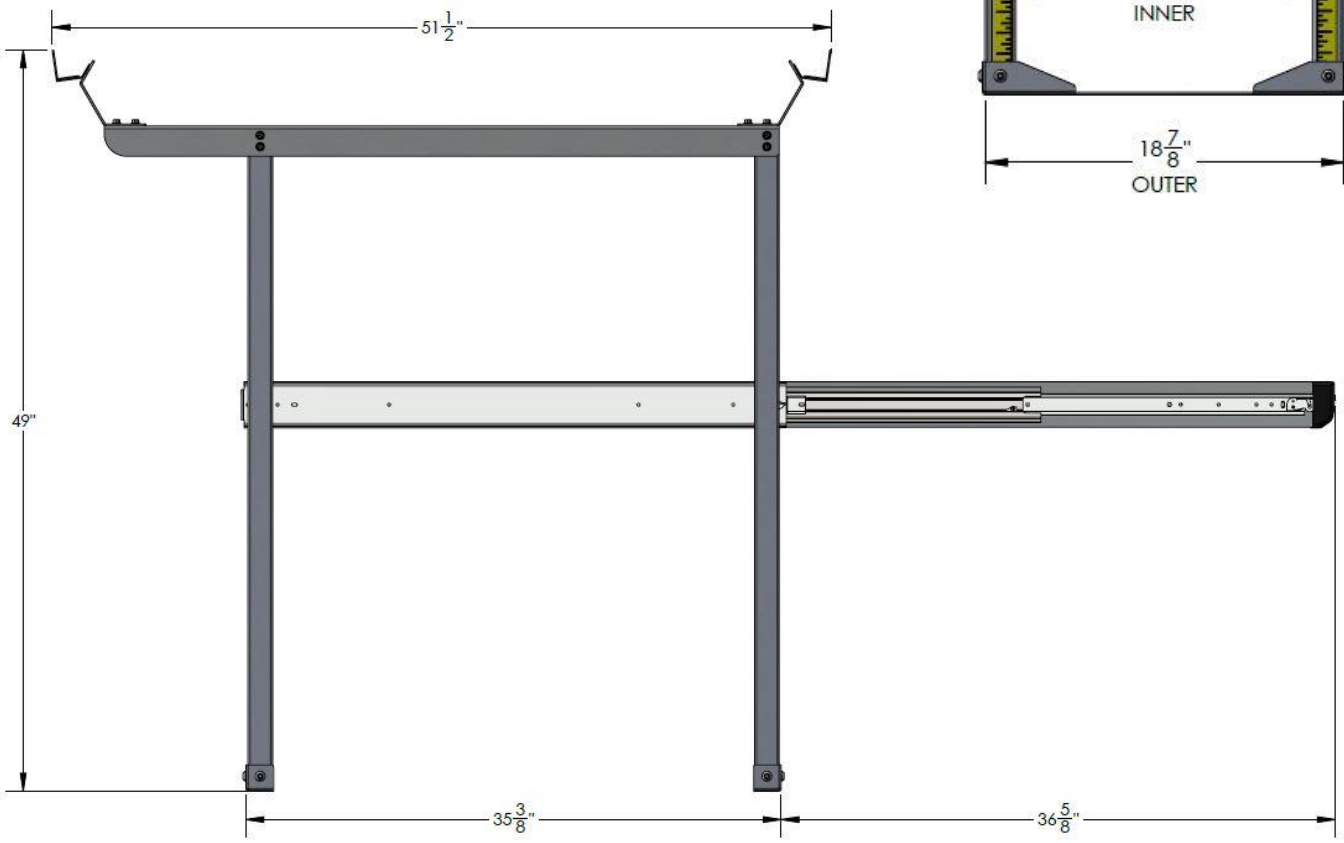
51 1/2"
49"
35 3/8"
36 5/8"